Inspired by **temperature**

Extremely precise
temperature control solutions

for materials testing, quality assurance, environmental simulation and much more

huber

The right solution for every **Application**

There are numerous applications for Huber temperature control systems in the aerospace, aviation and automobile industries. Typical applications include environmental simulations, material inspection, and temperature-dependent stress and load tests for materials, motors, bearings, fuel and engine parts.

Other common uses include research work, test series and quality controls on batteries, rechargeable batteries, sensors and electronic components. Researchers and engineers all over the world rely on our temperature control technology when constructing and operating test rigs.

Applications:

- Test rig construction
- Material testing
- Quality control
- Stress tests
- Environmental simulation
- Battery testing
- Solar technology
- Motor / bearing testing
- Calibration
- and much more

Temperature change tests

Small thermal regulation baths can be used for temperature change tests. Tests and pre-examinations can be carried out on material samples in the bath, quickly and easily. High-performance circulation thermostats are ideal for thermal tests that require a wide temperature range.

Various temperature conditions can be simulated, -40 °C to 85 °C is a common test range but wider ranges are possible to as low as -120 °C up to 425 °C.

Test rigs

We supply individually designed temperature control equipment in every performance class for temperature tests on engines, drives, drivetrains and other components. Our temperature control solutions are ideal for integration into test rigs and deliver reproducible temperatures.

If a system division into primary and secondary circuits is required due to test rig requirements based on material incompatibilities, pressure, viscosity, flow rates etc, Huber can offer an option for design and delivery of external heat exchanger solutions in loose or built-on format.

Addition/alternative to environmental chamber

Huber temperature control units are ideal as an alternative or extension to environmental chambers to lower their operational temperature range. Our temperature control units can be used in a wide range of tests, and often cost less than environmental chambers. Yet another benefit is the high temperature control speed which can be achieved with Unistats. Heating and cooling capacity can be transferred quickly and precisely – a critical advantage in many functional and material tests.

The combination of temperature control unit and environmental chamber allows simultaneous simulation of specimen temperatures as a function of environmental temperatures.

We would be happy to advise you with regard to applications with electrically non-conductive temperature media.

Temperature control solutions for
Test rig construction, aviation

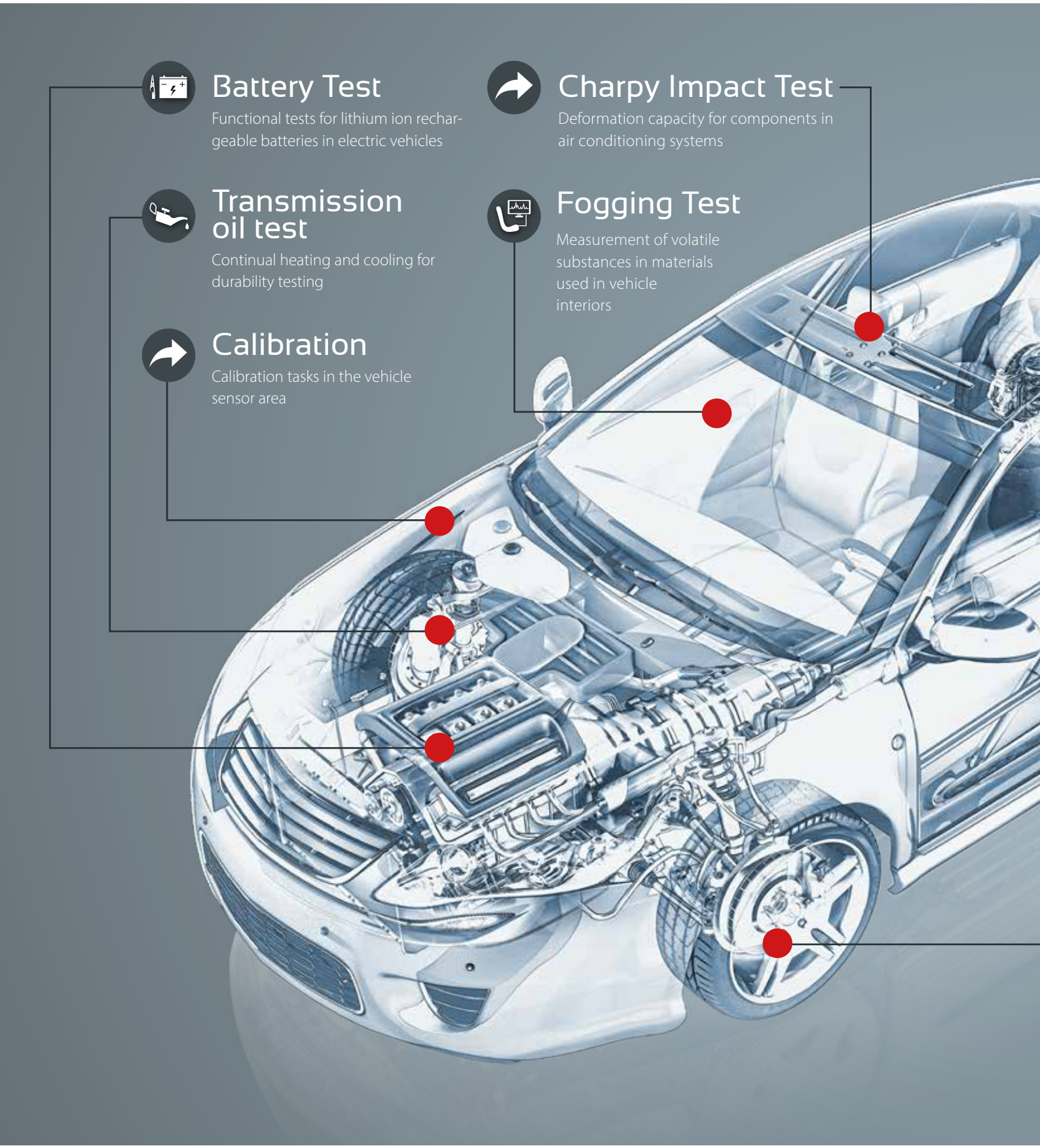

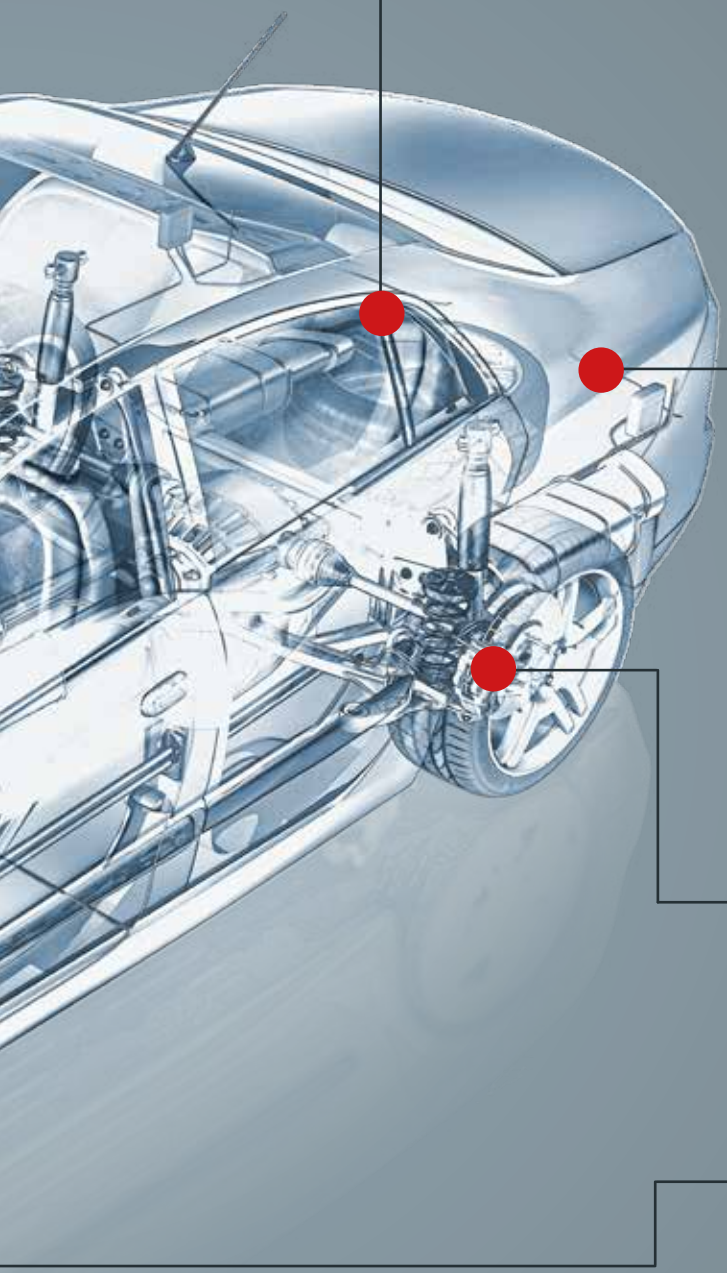

Vicat test

Tests for softening point for plastics

Cold filter plugging point

Determination of cold filter plugging point of diesel fuels

Fuel temperature control

Durability tests for fuel tanks

AdBlue® temperature control

Exhaust post-treatment of diesel fuels in cars

Stress test in test rigs

Long-term loading of vehicle components over several weeks under conditions of extreme temperatures

Corrosion testing

Corrosion testing with cyclical temperature fluctuation, moisture and saline vapour

Highest accuracy
Unimotive

The Unimotive model series is specially designed for applications in the automotive industry. The temperature control systems are constructed for operation with water-ethylene glycol mixture with corrosion protection (for example Glysantin®) down to -45 °C. Typical applications include temperature simulations as well as material testing and temperature-dependent stress and load tests for automotive parts and functional components.
The optionally available "Flow Control Cube" enables precise flow rate measurement and control.

Direct operation with water-ethylene glycol mixture

Up to +95 °C
Temperature range

Up to 35 kW
Cooling power

Up to 145 l/min
Pump capacity

Pilot ONE
Touch screen controller

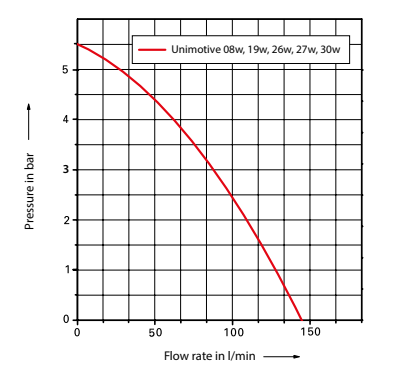

Pump curve
according to DIN 12876 with water at 20 °C

An additional pump curve with water-ethylene glycol mixture can be found on our website.

Model	Temperature range (°C)	Pump max. VPC[1] (l/min)	(bar)	Heating power (kW)	Cooling power (kW) at (°C) 20	0	-20	-40	Dimensions W x D x H (mm)	Cat.No.
Unimotive 08w	-45...95	145	5,5	12,0	14,0	10,0	5,0	0,8	730 x 860 x 1520	1089.0001.01
Unimotive 19w	-45...95	145	5,5	12,0	18,0	14,0	8,5	1,9	730 x 860 x 1520	1090.0001.01
Unimotive 26w	-45...95	145	5,5	24,0	28,0	25,0	14,5	2,6	730 x 860 x 1520	1091.0001.01
Unimotive 27w	-45...95	145	5,5	24,0	35,0	25,0	14,5	2,6	730 x 860 x 1520	1094.0001.01
Unimotive 30w	-45...95	145	5,5	12,0	21,0	17,5	9,5	3,0	730 x 860 x 1520	1096.0001.01

Individually configurable
Options for your application

AUTOMATION

Support for common data communication standards and software solutions for data recording, remote operation and programming.
Interfaces: e.g. Profibus, Modbus TCP, Ethernet, OPC-UA, RS232, RS485, USB, Analogue.

SENSOR OPTIONS

A selection of Pt100 sensors for temperature measurement and regulation at relevant points.

WATER GLYCOL

Direct operation with water glycol as a temperature control medium is possible with many Unistats, as well as use of electrically non-conductive liquids (e.g. 3M Novec).

MEASUREMENT AND CONTROL OF HTF

VPC bypasses and various flow rate meters allow measurement and control of heat transfer fluid (HTF) pressure and flow volume.

CIRCULATION PUMPS

Various pump options and optional pressure booster pumps allow flexible alignment of pressure and flow volume for the application.

DRY CONNECT/ DISCONNECT

Press & Twist connections make it easier to change the application on the temperature control unit. Having a wide internal bore the pressure drop is low keeping flow resistance to a minimum to promote efficient thermal transfer and temperature control.

EXPANSION

A range of expansion vessels is available as accessories for compensation of temperature-dependant volume changes.

CONNECTION SETS

Preconfigured sets consisting of T-bend and pipe extension for connecting additional M-FCC Flow Control Cubes.

Flow measurement and control
Flow Control Cube

The Flow Control Cubes are used to measure and control the flow and pressure of the thermal fluid. They can be used with Huber temperature control units with Pilot ONE technology.
Flow measurement is magnetic-inductive (MID models) or via a turbine (TURB models).

- FCC MID is suitable for electrically conductive liquids (e.g. water or water-glycol mixtures).
- FCC TURB is suitable for all Huber fluids (e.g. DW Therm or silicone oils such as M60.115/200.06)
- The turbine can be calibrated for different tempering fluids (e.g. for Huber fluids or also water-glycol mixtures)

	Flow Control Cube MID[1] ▸ Flow measurement magnetically-inductive	**Flow Control Cube TURB** ▸ Flow measurement via turbine
Temperature range	-40 ... 130 °C	-90 ... 250 °C
Permitted fluids	Water or Water/Glycol	Water/Glycol 50/50[2]
Accuracy flow control[3]	up to ± 0,1 l/min	up to ± 0,2 l/min
Min. volume flow	0,2 l/min	0,9 l/min
Max. volume flow	80 l/min	95 l/min
Max. permitted pressure	6,0 bar	6,0 bar
Dimensions W x D x H	425 x 600 x 520 mm	425 x 600 x 520 mm
Weight, netto	approx. 49 kg	approx. 50 kg
Noise level	ca. 43 dB (A)	ca. 43 dB (A)
Fluid connection	M30 x 1,5 AG	M30 x 1,5 AG
Power supply	90–240V 1~50/60Hz	90–240V 1~50/60Hz
Max. current	0,2 A	0,2 A
Fuse protection	2,0 A	2,0 A
Protection class	IP20	IP20
Min. ambient temperature	5 °C	5 °C
Max. ambient temperature	40 °C	40 °C
Suitable for units	Applications with volume flow of max. 85 l/min	Applications with volume flow of max. 95 l/min[4]
Construction / Design	On castors, loose[5]	On castors, loose[5]
Cat.No.	**10925**	**10937**

[1] Due to the technology used, the MID does not have to be explicitly matched to the medium used
[2] Calibration factory set up with 50/50, adjustment to another medium can be done by customer
[3] At 20 °C and water-glycol mixture 50/50. The accuracy is influenced by various factors (in particular the set flow rate, the fluid used, the fluid temperature).
[4] Volume flow >95 l/min on request
[5] Accessories for use with the FCC e.g. hoses, adapters, etc. must be ordered separately
[6] FCC is supplied assembled

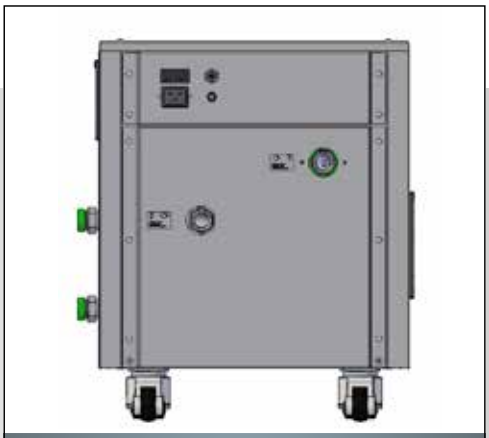

BACK VIEW

SINGLE-CIRCUIT CONTROL WITH FCC

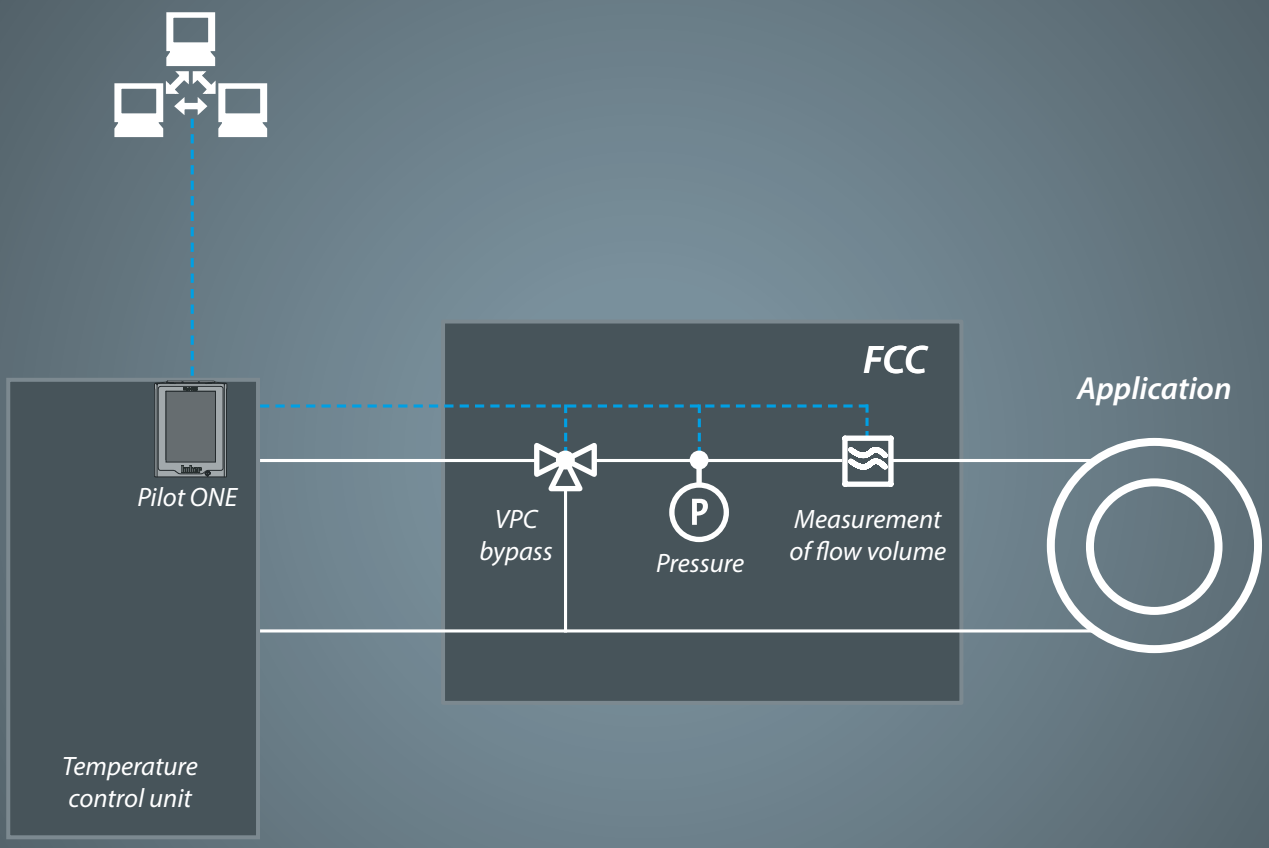

Flow measurement and control
Multi Flow Control Cube

The Multi Flow Control Cubes are used to measure and control the flow and pressure of the thermal fluid. In contrast to FCC, M-FCC has an independent controller, i.e. control takes place autonomously and communication with the Pilot ONE of the temperature control unit is not necessary. With M-FCC, multi-circuit control can be realised.

In most applications, a single temperature control unit is connected to an FCC for the first control loop. Additional M-FCC products are added for all further control loops.

For more flexibility and redundancy, we recommend a redundant temperature control unit as a backup for multiple control loops. Our field service will be happy to advise you on this topic.

- M-FCC MID is suitable for electrically conductive liquids (e.g. water or water-glycol mixtures)
- M-FCC TURB is suitable for all Huber fluids (e.g. DW Therm or silicone oils such as M60.115/200.06)
- The turbine can be calibrated for different tempering fluids (e.g. for Huber fluids or also water-glycol mixtures)

	Multi Flow Control Cube MID[1] ▸ Flow measurement magnetically-inductive	**Multi Flow Control Cube TURB** ▸ Flow measurement via turbine
Temperature range	-40 ... 130 °C	-90 ... 250 °C
Permitted fluids	Water or Water/Glycol	Water/Glycol 50/50[2]
Accuracy flow control[3]	up to ± 0,1 l/min	up to ± 0,2 l/min
Min. volume flow	0,2 l/min	0,9 l/min
Max. volume flow	80 l/min	95 l/min
Max. permitted pressure	6,0 bar	6,0 bar
Dimensions W x D x H	420 x 593 x 591 mm	420 x 593 x 591 mm
Weight, netto	approx. 51 kg	approx. 51 kg
Noise level	approx. 43 dB (A)	approx. 43 dB (A)
Fluid connection	M30 x 1,5 AG	M30 x 1,5 AG
Power supply	90–240V 1~/2~ 50/60Hz	90–240V 1~/2~ 50/60Hz
Max. current	0,2 A	0,2 A
Fuse protection	2,0 A	2,0 A
Protection class	IP20	IP20
Min. ambient temperature	5 °C	5 °C
Max. ambient temperature	40 °C	40 °C
Suitable for units	Applications with volume flow of max. 85 l/min	Applications with volume flow of max. 95 l/min[4]
Construction / Design	On castors, loose[5]	On castors, loose[5]
Internal Com.G@te	Optional #31217	Optional #31217
Cat.No.	**3601.0001.01**	**3601.0002.01**

[1] Due to the technology used, the MID does not have to be explicitly matched to the medium used
[2] Calibration factory set up with 50/50, adjustment to another medium can be done by customer
[3] At 20 °C and water-glycol mixture 50/50. The accuracy is influenced by various factors (in particular the set flow rate, the fluid used, the fluid temperature).
[4] Volume flow >95 l/min on request
[5] Accessories for use with the FCC e.g. hoses, adapters, etc. must be ordered separately

BACK VIEW

MULTI-CIRCUIT CONTROL WITH MULTIPLE M-FCC

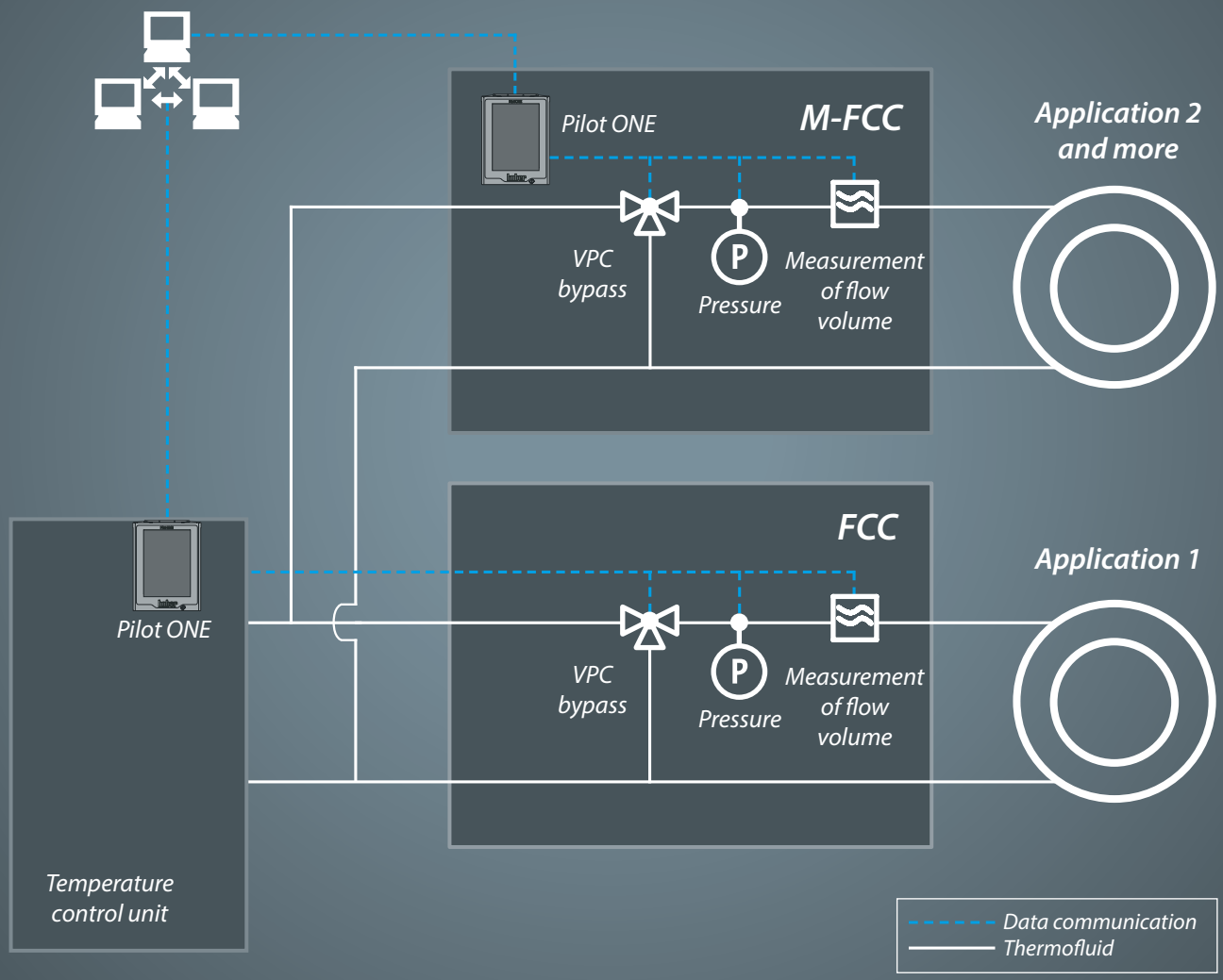

Interfaces
PROFINET gateway

PROFINET (Process Field Network) is the open Industrial Ethernet standard of the PROFIBUS user organisation e. V. (PNO) based on Ethernet-TCP/IP and complements Profibus technology for applications that require fast data communication via Ethernet networks in combination with industrial IT functions. PROFINET can be used to implement solutions for manufacturing technology, process automation, building automation and the entire spectrum of drive technology. With the PROFINET gateway, Huber temperature control units can be integrated into PROFINET networks easily, flexibly and close to the process. The PROFINET gateway is integrated into the project planning software with the aid of the associated GSDML file.

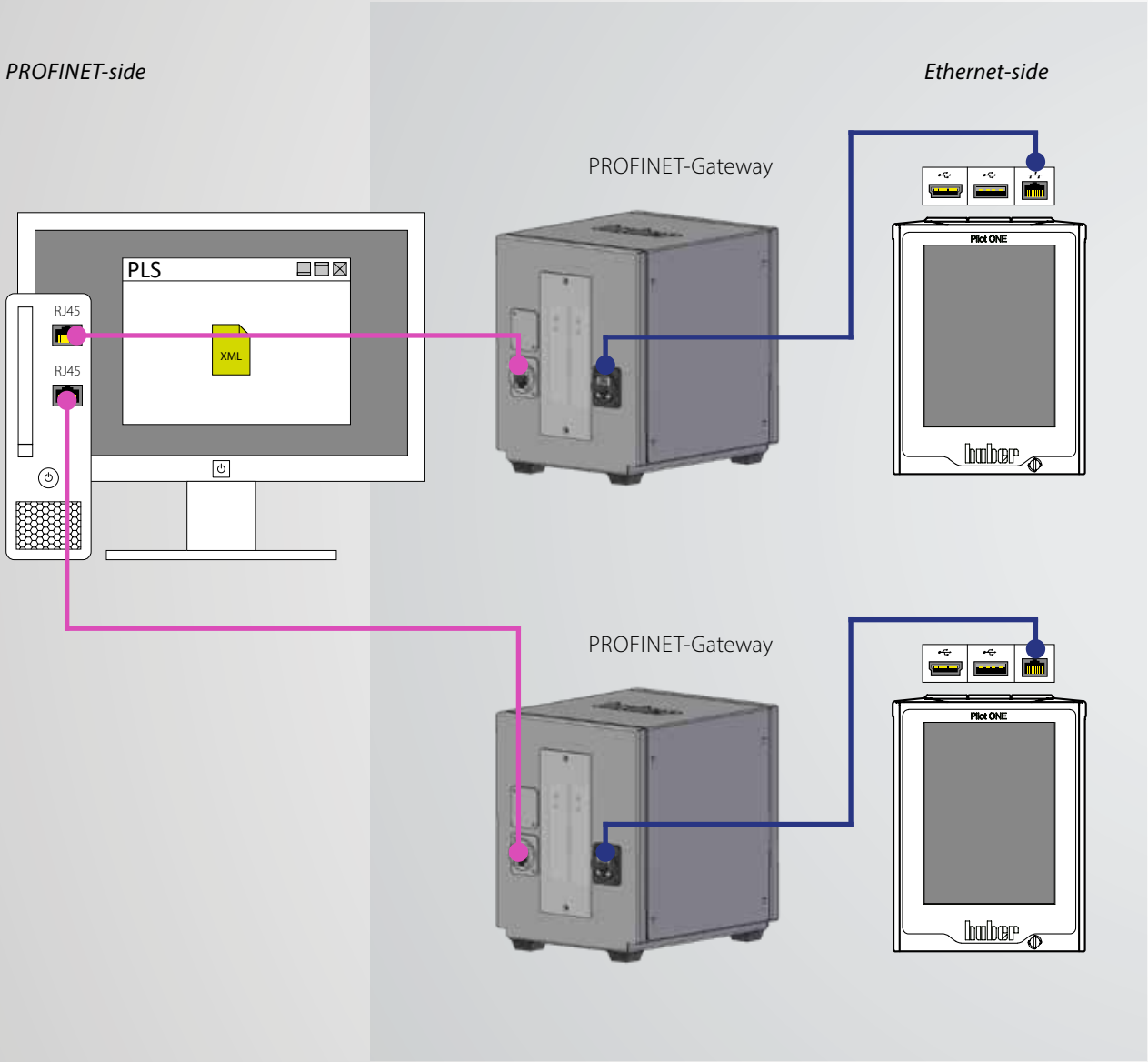

Model	Cat.No.
PROFINET-Gateway	10965

Interfaces
EtherCAT gateway

EtherCAT, short for Ethernet for Control Automation Technology, is an open Ethernet-based fieldbus technology that is standardised in international standards. EtherCAT is a very fast Industrial Ethernet system that is also suitable for use in time-critical applications. With the EtherCAT gateway, Huber temperature control units can be integrated into EtherCAT networks easily, flexibly and close to the process. The EtherCAT gateway is integrated into the configuration software with the aid of the associated GSDML file.

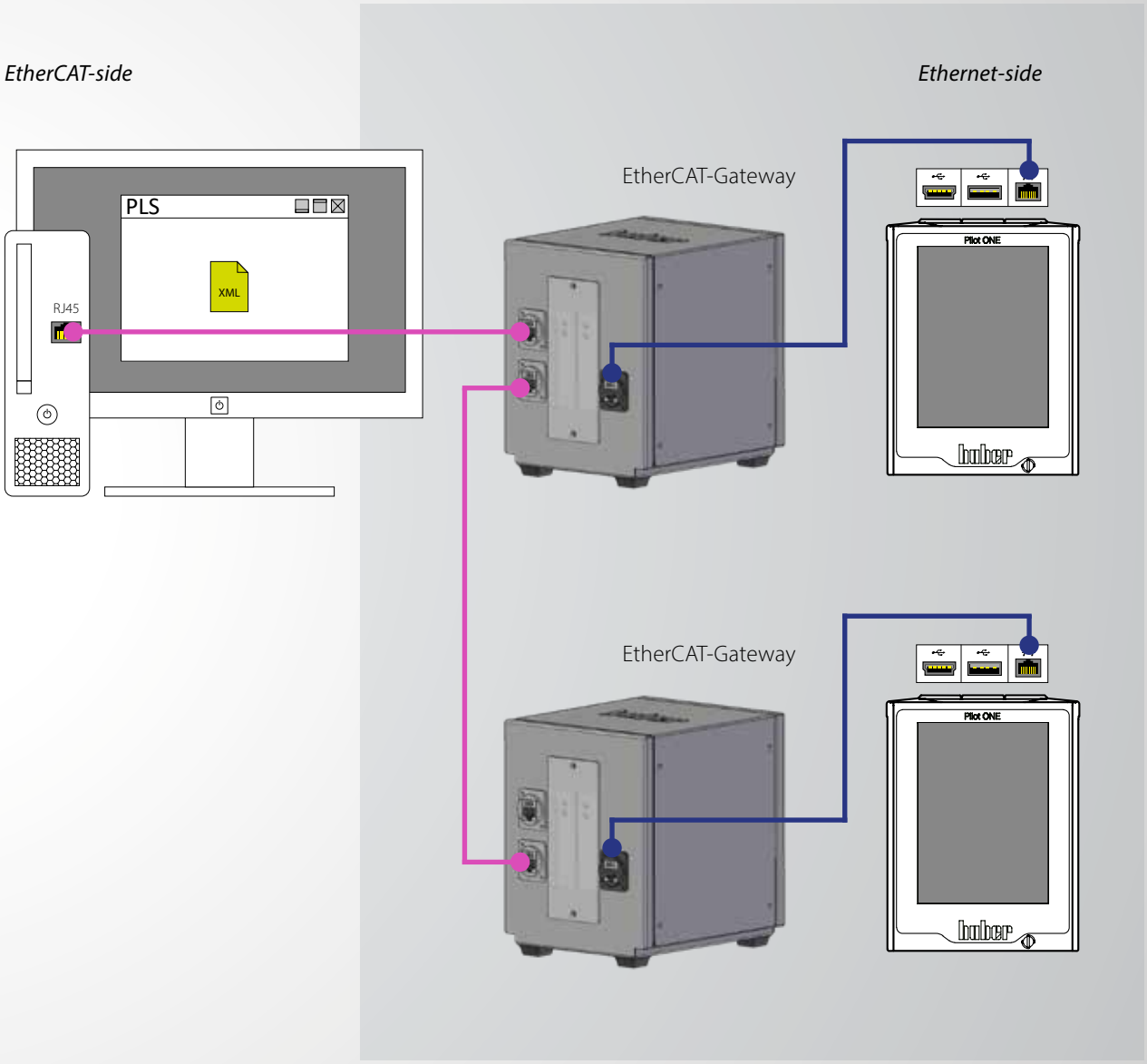

Model	Cat.No.
EtherCAT-Gateway	10966

Special **Solutions**

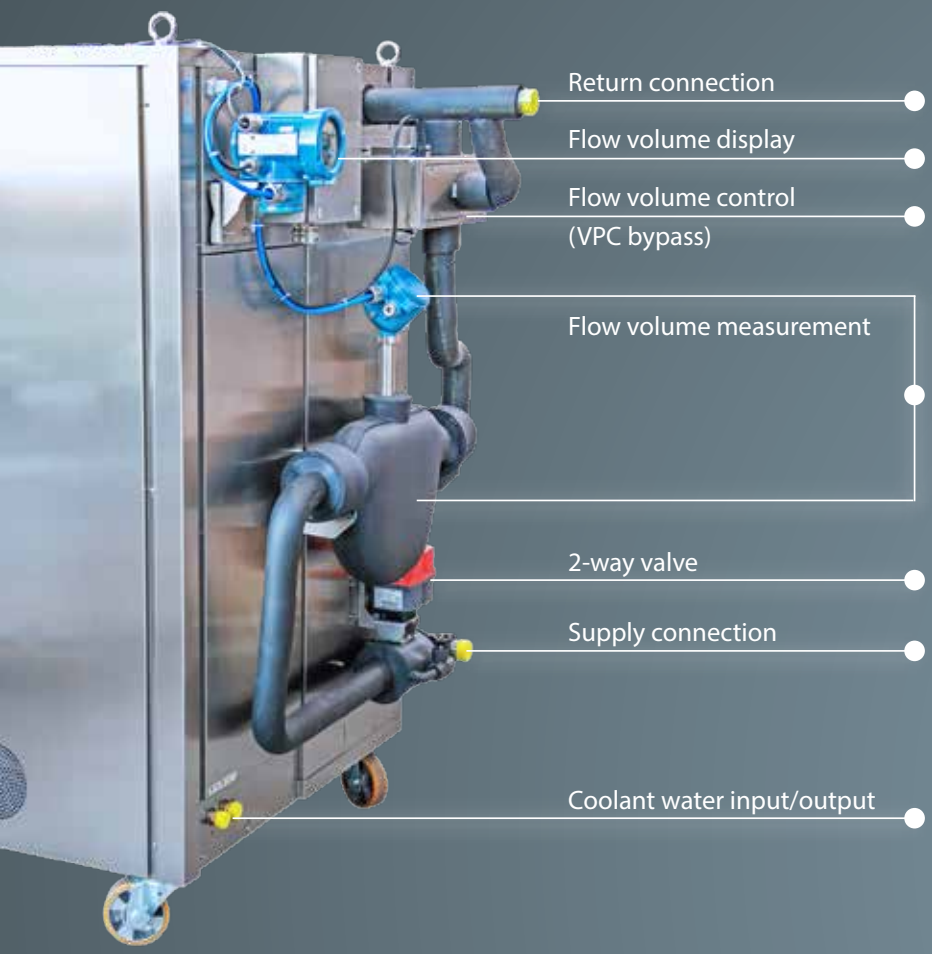

ATTACHMENTS ON THE BACK

Optional components such as flow meter, bypass etc can be fitted at the customer site or integrated onto the unit during the construction.

Our Engineering team are experience and knowledgeable and would be delighted to discuss the best solution for your application.

MODELS „ON TOP"

In these models, all additional components have been built "on top" of the temperature control unit. This kept the footprint and required space to a minimum.

Equipment built into the structural housing includes a bypass, volume flow meter, interfaces etc.

DIRECT OPERATION OR WITH HEAT EXCHANGER

There are basically two operation versions available for the temperature control unit. Version 1 is operation via an external heat exchanger. The advantage is this: The application circuit and temperature control circuit are separated, and on the application side, any temperature control liquid can be used. Version 2 is direct operation e.g. with water glycol, 3M Novec or other permissible temperature control media.

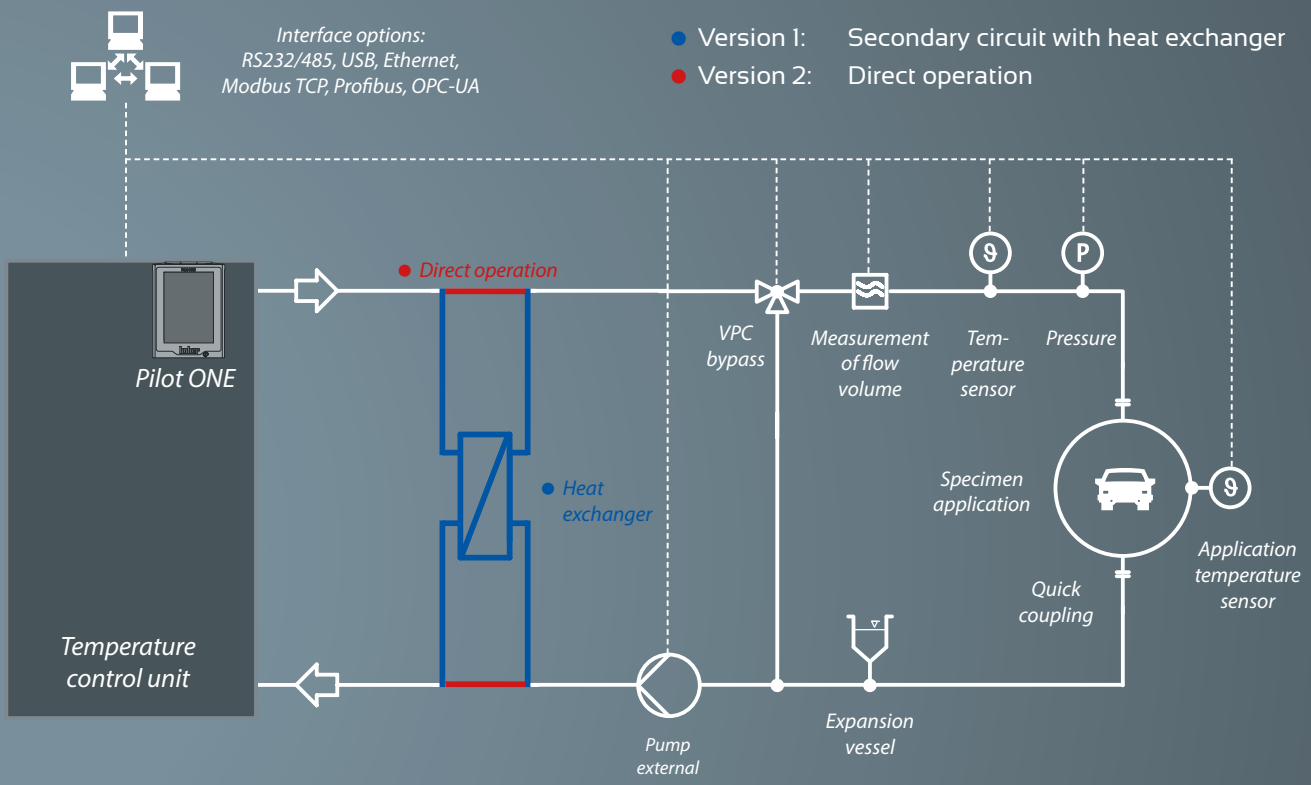

HEAT EXCHANGER

External heat exchanger for separation of fluid circuits of temperature control unit and application allow indirect operation with almost all temperature control liquids (e.g. in the event of viscosity problems, material incompatibilities).

Examples **of use**

Fuel temperature control

Huber temperature control equipment is used for cyclical heating/cooling of petrol or diesel. Dynamic temperature control systems are particularly suitable for this test, as they can change temperature quickly and cover a wide temperature range.

Cold filter plugging point

The most important test for the cold temperature resistance of the diesel fuel is the filter performance defined by the CFPP or Cold Filter Plugging Point Test in accordance with EN 116. At temperatures below the freezing point, paraffin crystals can increase the flow resistance in the fuel filter, reducing or stopping the flow of fuel.

Material deformation

Components such as condensers, air lines and exhausts are frequently exposed to temperature fluctuations from -90 °C to +150 °C. The behaviour of the materials in the different components can be tested with cold bath circulation thermostats under a range of load conditions.

AdBlue® temperature control

This application takes place in the SCR (selective catalytic reduction) catalytic converter. Using selective catalytic reduction, the emission of nitrogen oxide (NOx) is reduced by around 90% (in stationary operation). The liquid is a clear, synthesised 32.5 percent solution of high-purity urea in demineralised water.

Exhaust test

We supply a range of different temperature control units for fogging tests (in accordance with EN 14288 and DIN 75201) for individual components in car interiors.
When they warm up, the volatile constituents escape from the component and condense in the (colder) environment.

The KISS and CC series are used to heat the sample while the (e.g.) Minichiller is used to condense the vapours for analysis.

Transmission oil test

For transmission oil tests, you can use a Unistat with operational temperatures from -40 °C to +250 °C for temperature control. The transmission oil is pumped through a plate heat exchanger and flows through defined temperature profiles in various cycles.

Softening point

The Vicat Test is used to make statements about the softening point of plastics. A rounded needle with a flat end is pressed onto the sample with a defined pressure and continuous increase in ambient temperature. Depending on the test conditions chosen, the constant temperature increase must be 50 °C or 120 °C per hour, until the softening temperature (VST) is reached, and the needle can penetrate 1 mm into the material.

Examples **of use**

Optics, telescopes

Unistats are used for high-precision temperature control of calibration and vacuum chambers, in order to test and calibrate optical telescopes for space research. The parts and functional components are subjected to real conditions using high vacuum systems.

Additives, lubricants

Temperature-dependent test processes for development, optimisation and quality assurance of additives and lubricants. Typical objectives include improving the cold temperature behaviour of viscosity as well as optimisation of resistance to ageing, corrosion protection, dispersing capacity and foaming behaviour.

Pump test

Temperature control for pump test units for pumps for liquid and gaseous media. Exact temperature control delivers a high level of measurement accuracy and reproducibility for all parameters. Typical tests where the influence of temperature plays a major role include pressure tests, flow volume measurements, noise measurements, power consumption, leak tests and long-term durability tests.

Sensors

Unistats combined with the Unical calibration bath are ideal for functional testing and calibration of sensors such as Pt100 sensors. The stainless-steel bath is set up like a calorimeter, and so achieves excellent temperature homogeneity.

The individual temperature cycles can be prescribed using a programmer or control via a digital interface.

Corrosion testing

Vehicle chassis components are exposed to temperature fluctuations, moisture and environmental influences every day. These environmental conditions are recreated in special test chambers using mist, dry phases, salt solutions and other corrosive solutions.
The cyclical temperature fluctuations are critical here. Dynamic temperature units from Huber are ideal here, to test precise temperature changes over several test phases.

Material stress test

In the automotive industry, all vehicle components must undergo a wide range of stress tests - often under extreme climatic conditions. The components must be able to withstand the stress of cyclical, changing temperatures for several weeks or months. Unistats are the perfect choice here. The units are designed for reliable, permanent operation, and facilitate extremely rapid temperature change.

Battery test

One use of lithium ion batteries is in electric vehicles. These must pass a range of temperature tests before installation. For this, an ambient temperature from -20 °C to +40 °C is created in an environmental chamber. A Unistat, which can control temperature from -40 °C to +100 °C, is connected at a test point inside the environmental chamber using hoses.

Special solutions

If you need a temperature control solution specially adapted to your requirements, then we look forward to your enquiry. We would be delighted to offer personalised advice and give you suitable approaches to a solution, or show you reference projects we have already completed with comparable requirements.

Inspired by **temperature** designed for you

We would be delighted to solve your temperature control task.
We look forward to your enquiry.

Peter Huber Kältemaschinenbau AG
Werner-von-Siemens-Str. 1 · 77656 Offenburg / Germany
Telephone +49 (0)781 9603-0 · Fax +49 (0)781 57211
info@huber-online.com · www.huber-online.com

Sales	+49 (0)781 9603-123 · sales@huber-online.com
Technical Service	+49 (0)781 9603-244 · support@huber-online.com
Order Processing	+49 (0)781 9603-109 · orders@huber-online.com

EN_59589_03/2022

huber